Nema 12 Enclosure - GL 840N12-2442

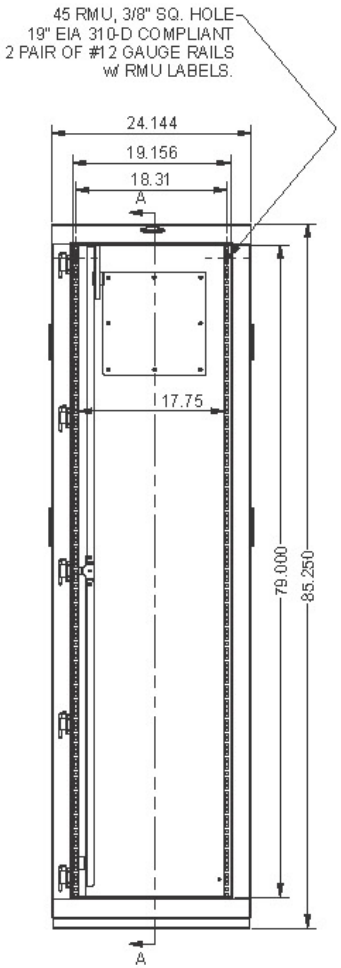

FRONT VIEW
FRONT DOOR REMOVED

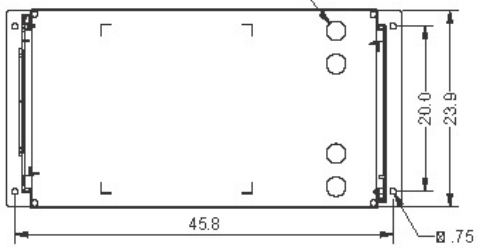

SECTION C-C

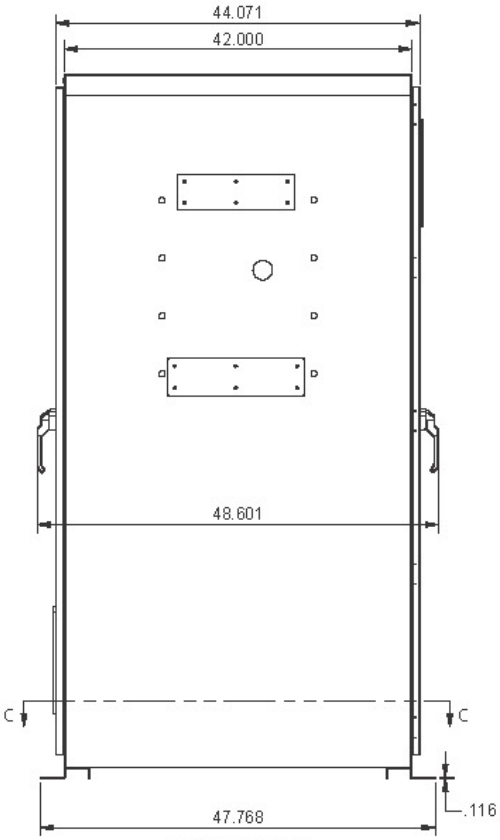

RIGHT SIDE VIEW

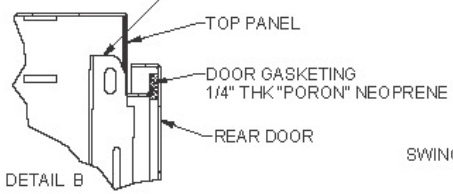

DETAIL B

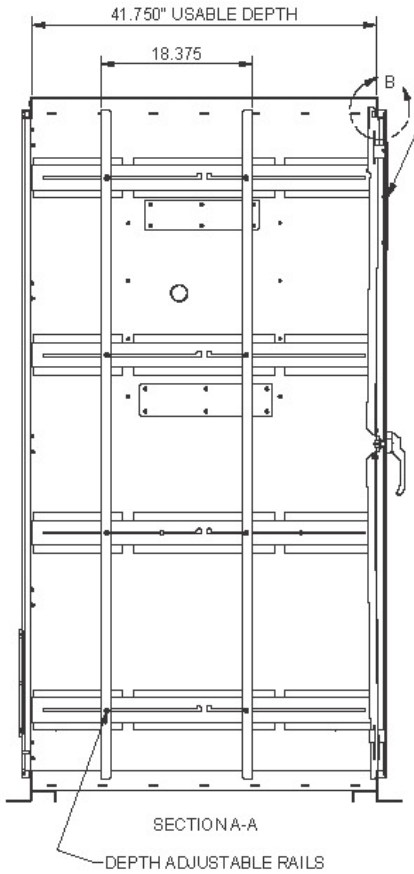

SECTION A-A

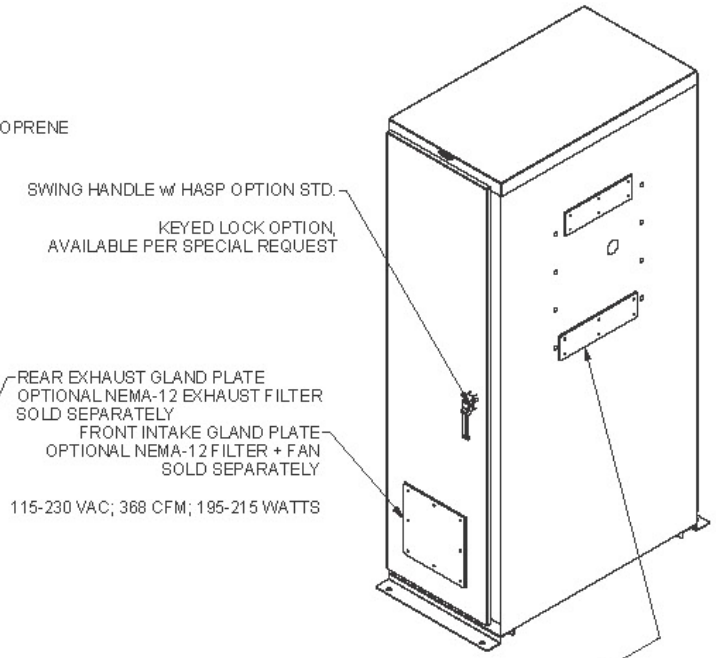

SPECIFICATIONS :

RACK SPACES : 19" EIA 310-D COMPLIANT, 3/8" SQ. HOLE w/ RMU LABELS.

WEIGHT CAPACITY : 2000 LBS. (BOLTED TO FLOOR)

COLOR : DURABLE BLACK TEXTURE POWDER COAT.

RATING : NEMA-12

CONSTRUCTION : #11 GAUGE ANCHOR PLATES
#12 GAUGE MOUNTING RAILS
#14 GAUGE WELDED BODY & DOORS.

HARDWARE : PACKAGE OF QTY-50 METRIC 6mm SCREWS & CAGE NUTS INCLUDED.

Copyright © Rackmount Solutions, Ltd. All rights reserved.